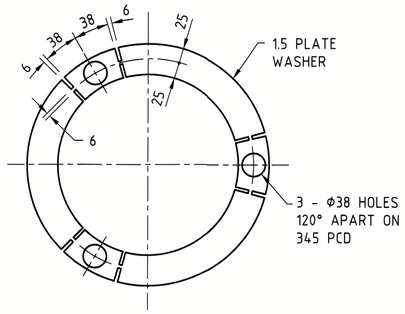

SLIP JOINT WASHER

TO BE PLACED BETWEEN SLIP BASE AND POLE BASEPLATE
1:5

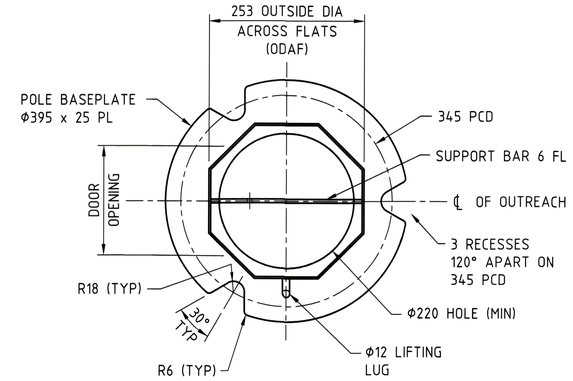

SECTIONAL PLAN

SLIP-BASE MOUNTED POLE BASEPLATE

1:5

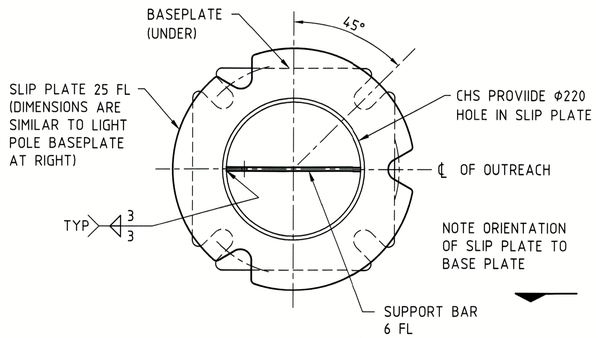

VIEW (A)

1:5

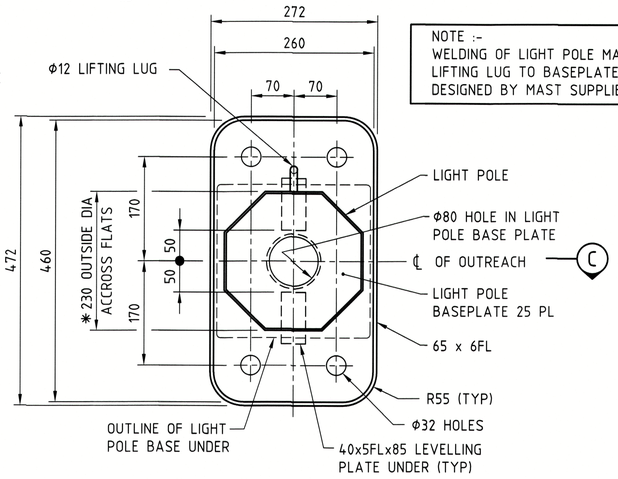

NOTE :-
WELDING OF LIGHT POLE MAST AND LIFTING LUG TO BASEPLATE TO BE DESIGNED BY MAST SUPPLIER.

* DENOTES NOMINAL OUTSIDE DIA ACROSS FLATS. ACTUAL DIMENSION IS TO BE DETERMINED FROM THE PROJECT SPECIFIC BRIDGE LIGHT POLE BASE CONFIGURATION.

SECTIONAL PLAN

BRIDGE MOUNTED POLE BASEPLATE

1:5

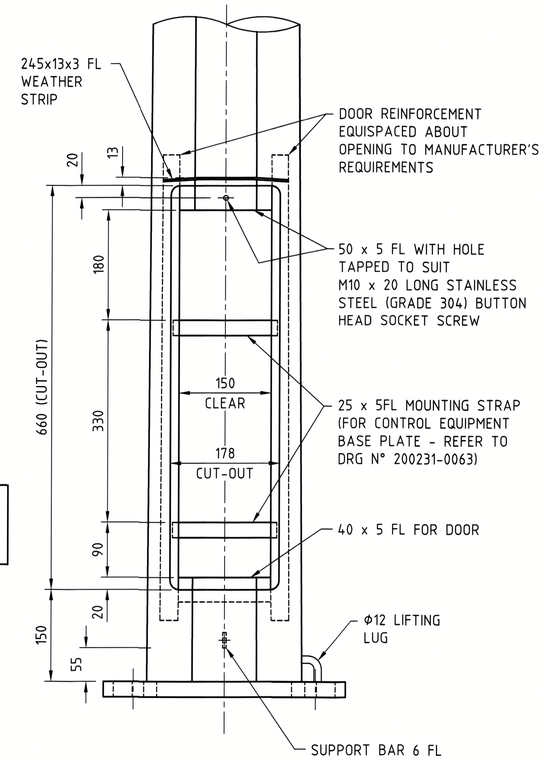

POLE DOOR OPENING DETAIL

(FOR ROAD SIDE POLE ONLY)
1:5

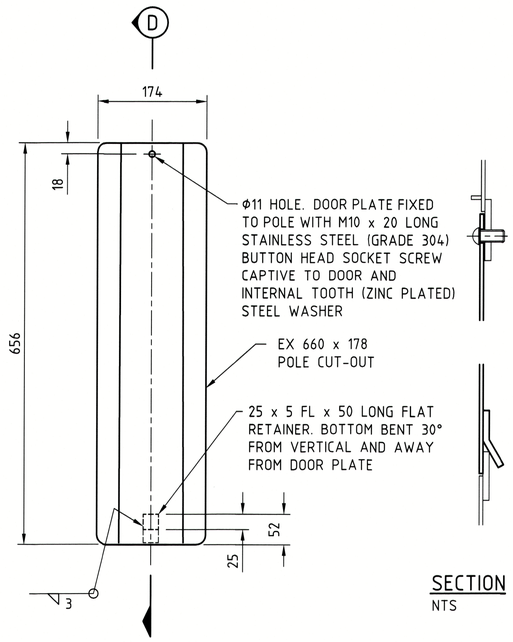

DOOR COVER DETAIL

1:5

SECTION (D)

NTS

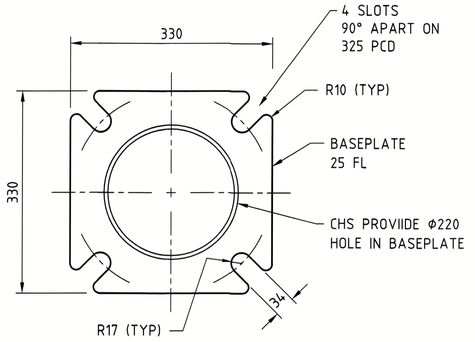

SECTION (B)

1:5

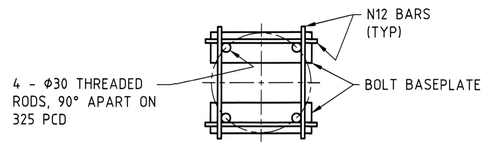

PLAN

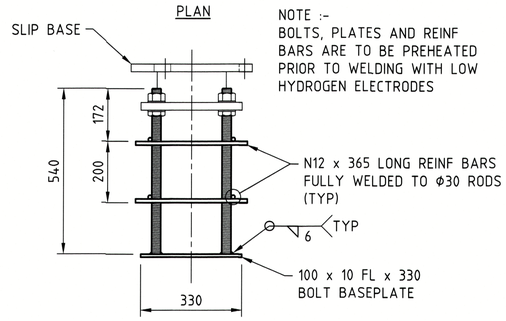

NOTE :-
BOLTS, PLATES AND REINF BARS ARE TO BE PREHEATED PRIOR TO WELDING WITH LOW HYDROGEN ELECTRODES

ELEVATION

HOLDING DOWN BOLT DETAIL

1:10

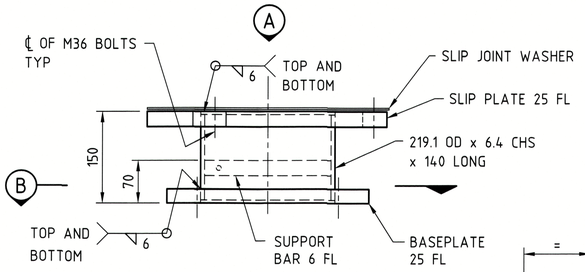

ELEVATION

SLIP BASE

1:5

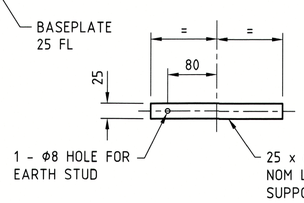

SUPPORT BAR DETAIL

1:5

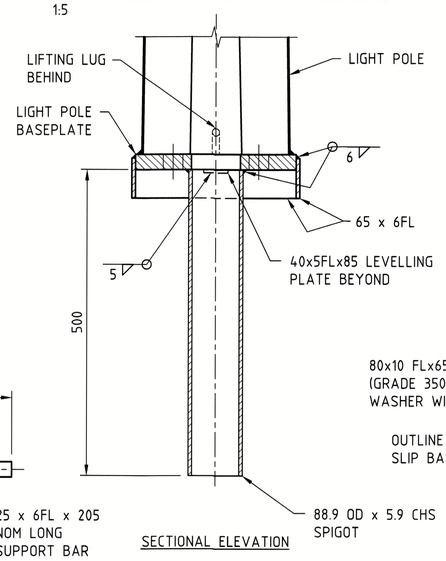

SECTIONAL ELEVATION

SECTION (C)

1:5

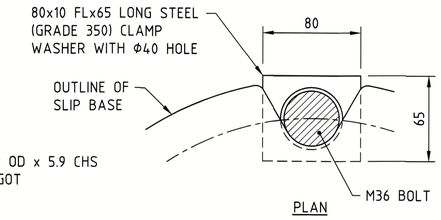

PLAN

CLAMP WASHER DETAIL

NTS

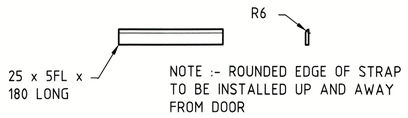

MOUNTING STRAP DETAIL

1:5

5 THIS DRAWING SHALL BE READ IN CONJUNCTION WITH DRAWING N° 0530-1456, 2230-0560, 2230-0561 AND 200231-0063

No.	DATE	DESCRIPTION	AUTHORISED
5	07/07/23	AMENDED DRAWING REFERENCES.	
4	29/9/04	MINOR CHANGES TO DETAILS. DRAWING TITLE BLOCK UPGRADED.	M. RAJAKARUNA 12/2/19
3	15/11/06	AMENDED OFFSET OF LEVELLING PLATES. ADDED 88.9 OD x 5.9 CHS SPIGOT TO BRIDGE MOUNTING POLE BASEPLATE	E.R. SMITH 12/12/06
2	21/3/06	AMENDED :- ORIENTATION OF SLIP PLATE RECESSES. BASEPLATE SLOT TO 34mm, BASEPLATE SKIRT INCREASED TO 65 x 6FL. ADDED :- SIGNATURES TO TITLEBLOCK. (MIN) TO Φ220 HOLE NOTE, DOOR OPENING SLIP-BASE MOUNTED POLE BASEPLATE DETAIL & BOXED WELDING NOTE.	M. BILLINGS 22/8/06
1	27/10/05	BRIDGE MOUNTED POLE BASEPLATE SIZE & HOLES SIZE AMENDED. ADDED LEVELLING PLATES TO BRIDGE MOUNTED POLE BASEPLATE. SLIP BASE SUPPORT BAR LOCATION, ORIENTATION AND N° OF HOLES AMENDED. CLAMP WASHER SIZE AND GRADE AMENDED.	M. BILLINGS 30/10/05

AMENDMENTS

TECHNOLOGY AND ENVIRONMENT DIRECTORATE
STRUCTURES ENGINEERING

Telephone (08) 9323 4111 Fax (08) 9323 4136

FILE No.	04/7221	JOB No.	
DRAWN	W. GILES JULY 2005	DESIGNED	M. BILLINGS 17/8/05
CHECKED	J. TURNER AUGUST 05	VERIFIED	A. LIM 17/8/05
APPROVED	J. GOH		18/8/05

SCALE 1:5 1:10 MICROFILM DATE A1

mainroads WESTERN AUSTRALIA

STANDARD DRAWING

ROAD-SIDE SLIP-BASE AND BRIDGE MOUNTED OCTAGONAL LIGHT POLE DETAILS - SHEET N° 2

DRAWING NUMBER AMEND.

0530-1457-5