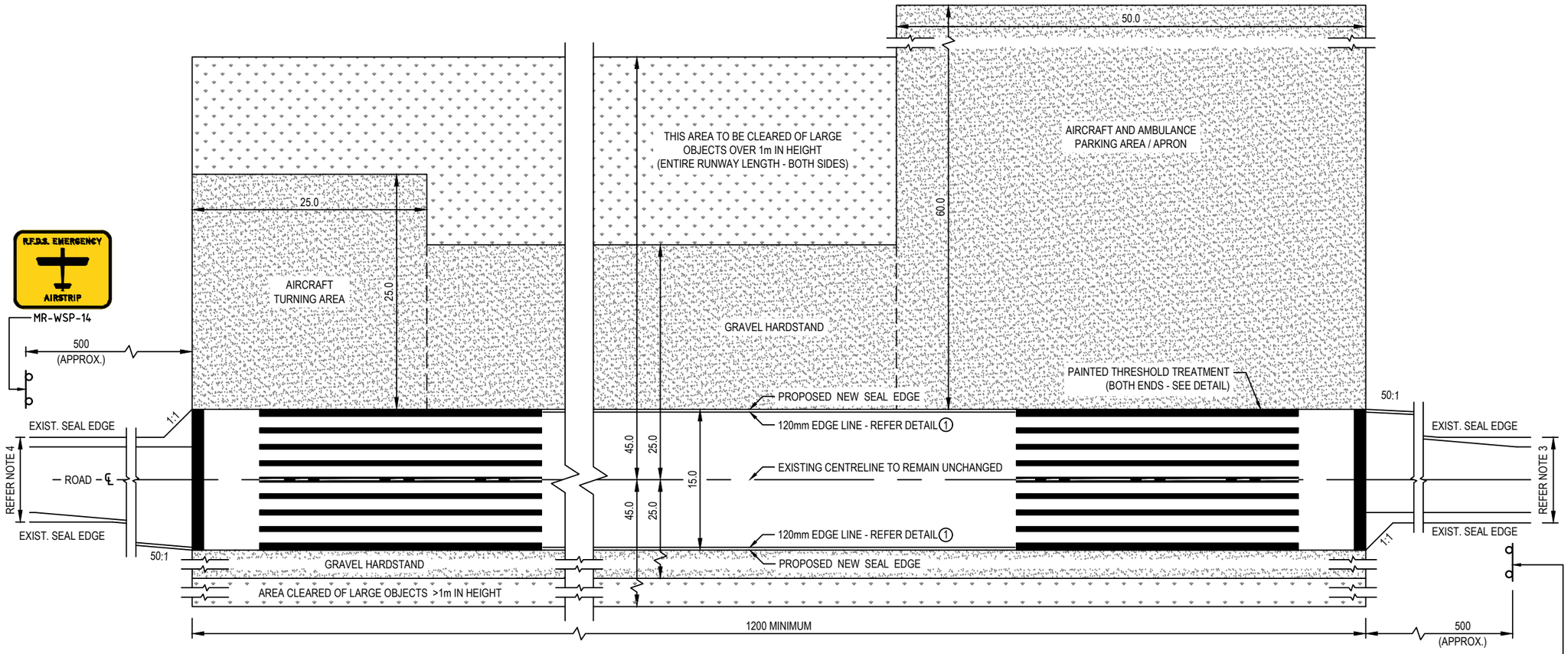

PLAN OF RFDS EMERGENCY RUNWAY STRIP

SCALE 1:500

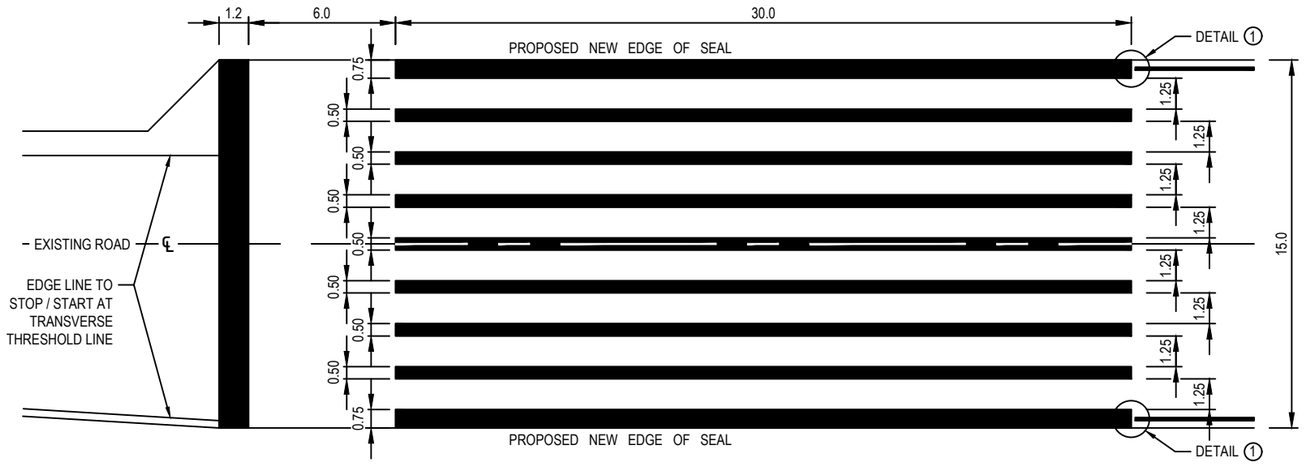

DETAIL OF PAINTED THRESHOLD TREATMENT
(BOTH ENDS)

SCALE 1:250

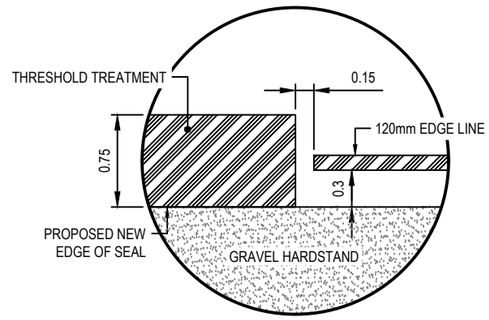

DETAIL 1

SCALE 1:50

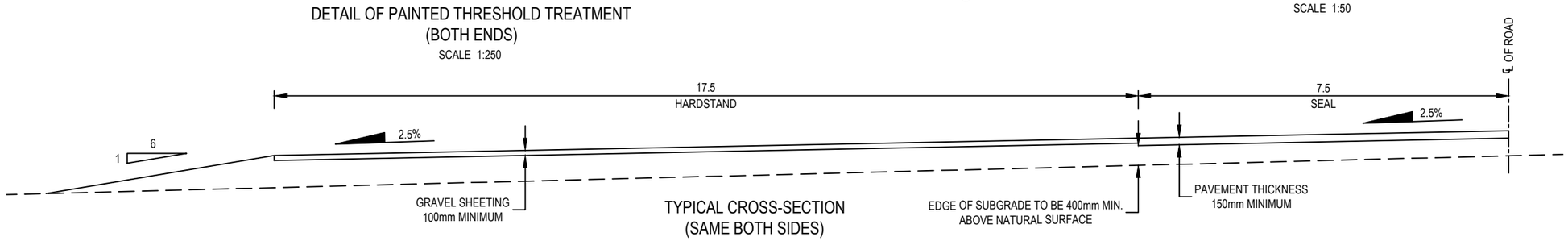

TYPICAL CROSS-SECTION
(SAME BOTH SIDES)

SCALE 1:100

AMENDMENTS

No.	DESCRIPTION	APPROVED & DATE
1	PAVEMENT WIDTHS, PAVEMENT MARKINGS AND TITLE BLOCK AMENDED.	A. Bonner 14/06/2023

NOTES

1. ALL DIMENTIONS ARE IN METERES UNLESS OTHERWISE NOTED.
2. ALL SIGNS AND GUIDE POSTS IN THE VICINITY OF THE EMERGENCY RUNWAY STRIP ARE TO BE EASILY REMOVABLE.
3. AUDIO-TACTILE LINEMARKING IS NOT TO BE USED WITHIN THE LENGTH OF THE RUNWAY.
4. REFER TO MAIN ROADS WA SUPPLEMENT TO AUSTROADS GUIDE TO ROAD DESIGN - PART 3 FOR REGIONAL SEAL AND PAVEMENT WIDTH REQUIREMENTS.

mainroads WESTERN AUSTRALIA
PLANNING AND TECHNICAL SERVICES DIRECTORATE
ROAD AND TRAFFIC ENGINEERING BRANCH
Waterloo Crescent EAST PERTH 6004
Telephone 138 138

DRAWN	J. COOK	
DESIGNED	M. VASEV	
VERIFIED	J. KARPINSKI	05/03/2004
APPROVED	R. GROVE	08/03/2004
FILE NO.	13/4331	

SCALES: 1:500, 1:250, 1:100, 1:50

A3

GUIDELINE DRAWING

EMERGENCY LANDING STRIPS
RUNWAY DETAILS

MRWA DRAWING NUMBER: 200431-0003-1

AMENDMENT