mainroads WESTERN AUSTRALIA

We're working for Western Australia.

Main Roads Supplement to the Austroads Guide to Road Design

Part 3: Geometric Design

Printed copies are uncontrolled unless marked otherwise.

D24#960516
June 2026

Contents

PURPOSE **8**
GENERAL STANDARDS AND APPLICATION **8**
1 INTRODUCTION **8**
1.1 Purpose 8
1.2 Design Criteria in Part 3 8
2 FUNDAMENTAL CONSIDERATIONS **9**
Design Vehicle 9
3 SPEED PARAMETERS **9**
3.2 Operating Speeds on Urban Roads 9
3.3 Operating Speeds on Rural Roads 9
3.8 Operating Speeds for Temporary Works (including side tracks) 10
4 CROSS SECTION **10**
4.1 General 17
4.2.3 Crown Lines 18
4.2.5 Urban Road Widths 18
4.2.6 Rural Road Widths 19
4.3 Shoulders 21
4.3.2 Width 21
4.3.5 Shoulder Crossfalls 21
4.3.6 Pavement Batters 21
4.4.4 Kerb Backfill 23
4.4.5 Roadside Items and Traffic Management Systems 23
4.5 Batters 25
4.5.4 Main Roads Typical Batters 25
4.6.4 Kerb and Channel 26
4.8 Bicycle Lanes 26
4.8.1 General 27
4.8.9 Sealed Shoulders 27
4.9 High Occupancy Vehicle (HOV) Lanes 27
4.12 Bus Stops 28
5 SIGHT DISTANCE **28**
5.1 General 28
5.3.2 Truck Stopping Sight Distance 28
5.4.1 Benching for Visibility on Horizontal Curves 28
5.5.2 Requirements where there is no Line of Sight over Roadside 28
6 COORDINATION OF HORIZONTAL AND VERTICAL ALIGNMENT **28**
6.2 Safety Considerations 28

6.4 Drainage Considerations 29
7 HORIZONTAL ALIGNMENT 29
7.5.1 Compound Curves 29
7.5.4 Transition Curves 29
7.6 Side Friction and Minimum Curves Sizes 30
7.6.1 Minimum Radius Values 31
7.8 Curves with Adverse Crossfall 32
7.9 Pavement Widening on Horizontal Curves 33
8 VERTICAL ALIGNMENT 33
8.1 General 33
9 AUXILIARY LANES 37
9.9 GEOMETRIC REQUIREMENTS 37
10 BRIDGE CONSIDERATIONS 39
10.2 Cross Section 39
APPENDIX A EXTENDED DESIGN DOMAIN (EDD) FOR GEOMETRIC ROAD DESIGN . 39
A.3.5 Longitudinal Deceleration 39
APPENDIX B EMERGENCY AIRCRAFT RUNWAY STRIPS 39
APPENDIX C SPEED PARAMETER TERMINILOGY 40
APPENDIX D EXAMPLE CALCULATION OF THE OPERATING SPEED MODEL 40
APPENDIX E NARROW MEDIAN TREATMENTS WITH WIRE ROPE SAFETY BARRIER 40
APPENDIX F GUIDANCE FOR WIDE CENTRELINE TREATMENTS 40
APPENDIX G FLOW CHARTS AND TABLE FOR DETERMINING STOPPING SIGHT DISTANCE REQUIREMENTS FOR CURVES WITH BARRIERS 40
APPENDIX H THEORY OF MOVEMENT IN A CIRCULAR PATH 40
APPENDIX I REVERSE CURVES 40
APPENDIX J TRANSITION CURVES (SPIRALS) 40
APPENDIX K VERTICAL CURVE CURVATURE FORMULAE 41
APPENDIX L POLICY AND GUIDELINES FOR OVERTAKING LANES 41

Document Control

Owner	Manager Road & Traffic Engineering
Custodian	Con Magriplis
Document Number	D24#960516 D24#964991 (PDF Version)
Issue Date	4th June 2026

Review Frequency	5 years

Amendments

Revision Number	Revision Date	Description of Key Changes	Section / Page No.
1	09-Dec-2011	Guideline Developed.	All
1A	15-Dec-2011	Editorial Change.	General Standard and Application
1B	10-Jan-2012	Drawing 200631-0039 amended.	9.9.3
1C	17-Jan-2012	Note (iv) to Table 4.3 amended. Figures 4.4.4.1 & 9.9.2 amended.	4.2.4, 4.4.4 & 9.9.2
1D	07-Mar-2012	(iii) corrected to (ii) in row 'Sealed Trafficway Width'	Table 4.3
1E	20-Mar-2012	Overtaking Lanes – Policy and Application Guidelines added.	9.4.1 and Appendix H
1F	11-May-2012	Paragraph 2 added. Table 4.3 amended. Paragraph 2 added. Figure 4.4.4.1 amended. Tables 4.5.3.1, 4.5.3.2 & 4.5.3.3 amended. Figure 4.5.4 amended. Clause reworded. Last paragraph added. Step 2 'Traffic Lane' changed to 'Seal'	3.4 4.2.4 4.3.5 4.4.4 4.5.3 4.5.4 5.4.1 6.2 7.7.5
1G	01-Aug-2012	Figure 9.9.2 Merge Taper Detail amended.	9.9.2
1H	22-Aug-2012	New clause added for Roadside Items and Traffic Management Systems	4.4.5
1I	25-Sep-2012	Formulae on Figure 7.7.12 corrected.	7.7.12
1J	02-May-2013	Broken link rectified.	All
1K	13-Aug-2013	Sealed shoulder widths and notes amended.	Table 4.3
1L	14-Aug-2013	Table drain width amended.	Table 4.5.3.3
1M	15-Aug-2013	Table drain depth amended.	Table 4.5.3.3

1N	06-Mar-2014	Drawing 200631-0039 amended.	9.9.3
1O	26-Jun-2014	Merging Taper guidance updated. Figure 9.9.2 Merge Taper Detail amended.	9.9.2
1P	10-Dec-2014	Note (iii) amended, notes (vi) and (vii) added	Table 4.3
1Q	29-Jan-2015	Section on Seal and Shoulder Widths across the State Road Network added Section on Freeway Cross Sections added	All
1R	14-May-2015	Clause added.	9.5.2
1S	03-Jun-2015	Clause 4.5.5 relating to the use of red asphalt on shoulders has been removed. Alternative Merge Treatments – Drawing 200931-0010 removed. Replaced by Drawings 201431-0038 and 201431-0039	4.5.5 9.9
1T	03-Dec-2015	Horizontal Curve Tables updated.	All
1U	04-Dec-2015	Horizontal Curve Tables – Revision status record and version number added.	All
1V	23-Mar-2016	Reference to Austroads tables updated. Width dimension removed from tables 4.5.3.1, 4.5.3.2 and 4.5.3.3 New clause added for shoulder treatment at diverge tapers.	4.2.4 4.5.3 9.4.1
1W	12-Apr-2016	Alternative Merge Treatments Drawings 201431-0038 and 201431-0039 amended.	9.9
1X	28-Apr-2016	Clause relating to rolling crowns added.	7.7.13
1Y	20-Jul-2016	Pavement Batter Widths table added.	4.3.5
1Z	25-Jan-2017	Contact person changed to Phil Rosser.	Header
2	27-Jun-2017	Drawing 200631-0039 updated to current revision.	9.9.3
3	13-Oct-2017	Updated to reference the 2016 version of the Austroads Guide. New Section 4.1A relating to seal and shoulder widths.	All
3A	16-Oct-2017	Horizontal Curve Tables amended to rev 3A	7.7.3
3B	10-Apr-2018	2031 Cross Section and Low Cost Cross Section links amended.	4.1A

3C	24-Apr-2018	2031 Cross Section and Low Cost Cross Section links amended.	4.1A
3D	06-Jun-2018	Table 4.5 amended. Second paragraph deleted. Figure 4.12.3 amended. Extended Design Domain considered. Third paragraph deleted. Section deleted and advice moved to Austroads GRD Part 4A Supplement section 2.2.4. Figure 8.9.1 deleted and replaced with Table 8.9.1	4.2.6 4.3.6 4.4.4 6.2 7.7.3 7.7.14 8.6.5
3E	26-Jun-2018	Adverse crossfall amended.	7.8
3F	25-July-2018	Commentary added to 5.5.2 and Appendix G amended to provide consistency.	5.5.2 and Appendix G
3G	08-Aug-2018	Combined SFF table included, minimum radii criteria added and Horizontal Curve Tables amended to Rev 4.	7.6 &7.6.1
3H	15-Aug-2018	Horizontal Curve Tables amended to Version 4A	7.6 & 7.7.3
3I	06-Sep-2018	Clarification to origins of f values for Table 7.12	7.8
3J	24-Oct-2018	Equation 26 amended.	8.6.6
3K	07-Feb-2019	Document hierarchy clarified.	All
3L	20-Mar-2019	Longitudinal Deceleration guidance with drawing 201831-0070 added.	Appendix A
3M	30-May-2019	Sealed shoulder widths on Figures 1.3, 1.4 and 1.5 amended.	4.1A
3N	10-Sep-2019	Drawing 9331-0376 amended.	4.6.4
3O	25-Feb-2020	Alternative Merge Treatment drawing 200931-0010 superseded by drawings 201431-0038 and 201431-0039.	9.3.3
3P	01-Jul-2020	2031 Cross Section and Low Cost Cross Section links amended.	4.1A
3Q	03-Jul-2020	Table showing the required “Low Cost" and “2031" Cross Sections amended.	4.1A

3R	19-Jul-2022	Figures 4.2, 4.12.1, 4.12.3 & 4.5.4.1 & 4.5.4.2 updated.	4
3S	29-Nov-2022	"Departure from Standards" text added.	8.6.3
3T	08-Dec-2022	Desirable Minimum Values for 2.0s corrected.	Table 8.7
3U	21-June-2023	RAV Vehicle reference for minimum lane widths included.	4.2.5
4	17-July-2024	Reference to year 2031 changed to 2040. Austroads references updated. Freeway cross sections updated. Aquaplaning details added. New format incorporated.	All
4A	19-August - 2024	Links to TRIM documents corrected.	All
4B	9-September-2024	Figure 4.4.4 Kerb Backfill amended.	4.4.4
4C	5-December-2024	Note relating to pavement widening on horizontal curves added.	7.9
4D	22-July-2025	Design Criteria in Part 3 Longitudinal grade – Departure from Standards added.	1.2 6.4
4E	4-June-2026	Note relating to approval from MRTE added.	5.5.2

PURPOSE

This Supplement has been developed to be read in conjunction with the Austroads Guide to Road Design (GRD) Part 3: Geometric Design (2021), a copy of which can be obtained via the Austroads website.

In Western Australia, Main Roads' policies, guidelines and standards take precedence over Austroads Guides and Standards Australia Standards. National Guides and Standards take precedence over International Guides and Standards, unless specifically stated otherwise. This Supplement has the same structure as the equivalent Austroads Guide and only additional requirements, clarifications, or practices different from Austroads appear. Where appropriate, this Supplement may also contain additional sections and figures not covered by Austroads, but the numbering sequence found in the Austroads Guide remains. Figures and tables in this Supplement replace those with the same figure or table number in the equivalent Austroads Guide.

GENERAL STANDARDS AND APPLICATION

The purpose of this document is to detail Main Roads' standards for the geometric design of sealed roads in Western Australia and to provide practical guidelines for the application of these standards.

All road design projects should have the following primary design objectives:

- Maximise safety.
- Minimise costs associated with construction, maintenance and use of the route.
- Minimise adverse impacts and enhance the environment where possible.
- Maximise operational efficiency - the ability to carry the required volume and mix of traffic at a speed acceptable to all road users.
- Take into account the views of the public including local residents, businesses, community groups and road users.
- Integrate visually with the surrounding environment.
- Consider the planned ultimate layout (road and adjacent developments) in the vicinity of the works and ensure that it can be accommodated with a minimum of reconstruction in the future.
- Maximise opportunities to cater for the needs of all road user groups.

1 INTRODUCTION

1.1 Purpose

For guidance on the design of unsealed roads refer to the "ARRB Unsealed Roads Manual; Guidelines to Good Practice - March 2009 edition".

1.2 Design Criteria in Part 3

The use of minimum or maximum design values are to be avoided except where absolutely critical to achieving the most suitable and safe outcome. Generally, if minimum or maximum

values are used for any particular design element it becomes necessary to avoid using minimum or maximum design values for any other element on that particular segment or immediately adjacent road section. This is necessary to allow an appropriate factor of safety to road users.

Where a minimum or maximum design value is being considered, the Designer is required in the first instance to apply the Desirable Minimum or Desirable Maximum value. Should that result in a solution that is not technically feasible or is unreasonably cost prohibitive, the Designer may adopt an Absolute Minimum or Absolute Maximum value as outlined in relevant Austroads Guides. In WA, this is considered as a "Departure from Standards" and is subject to the approval of the Manager Road & Traffic Engineering (MRTE). These minimum and maximum values are contained in the Normal Design Domain.

To go below an Absolute Minimum value or above an Absolute Maximum value is to go beyond the Normal Design Domain and into the Extended Design Domain (EDD) as explained in detail Appendix A in Austroads Guide to Road Design Part 3 (2021). To apply a value outside the Normal Design Domain, a comprehensive risk assessment that fully justifies the use of that value must be submitted to the Manager Road & Traffic Engineering (MRTE). Acceptance of a design solution that utilises an EDD value is subject to the written recommendation of the MRTE and approval of the Executive Director Planning & Technical Services (EDPTS).

The Designer is responsible for the preparation of documentation that correctly represents the design as outlined in the Design and Drawing Presentation guidelines. The Project Manager will arrange independent design reviews and audits to ensure that the design solution meets its primary objectives.

2 FUNDAMENTAL CONSIDERATIONS

Design Vehicle

More detailed information for Oversize and High Wide Loads can be obtained from the Main Roads Heavy Vehicle Operations Website Heavy Vehicles - Policy and Guidelines.

3 SPEED PARAMETERS

3.2 Operating Speeds on Urban Roads

Main Roads practice is to use a design speed that is 10km/h above the legal or posted speed limit for the design of urban roads.

3.3 Operating Speeds on Rural Roads

Where the operating speed of a rural road is not determined using the Operating Speed Model, Main Roads practice is to use a design speed that is 10km/h above the legal or

posted speed limit for the design of rural roads to a maximum of 110km/h. For example, where the posted speed limit is to be 100km/h then the design speed is 110km/h.

Additional speed data can be obtained from local traffic classifiers, if not already available. The reader should check with the Asset & Geospatial Information Branch.

On sections of rural road that are also designed as emergency landing strips a higher design speed is required. Designers should refer to the Emergency Landing Strips guideline for further details.

3.8 Operating Speeds for Temporary Works (including side tracks)

Designers should refer to the Temporary Alignments in Urban Areas guideline for further details associated with temporary works.

4 CROSS SECTION

4.1A SEAL AND SHOULDER WIDTHS ACROSS THE STATE ROAD NETWORK

Background

In January 2015, in the interest of applying consistent seal and formation widths across the rural road network in WA, "2031" seal and formation widths were developed based on a 20-year growth rate applied to a modified version of Table 4.5 in Section 4.2.6 based on Passenger Car Units (PCUs) per day rather than vehicles per day. The nominated cross sections were confirmed with each Regional Director and were presented in tabulated and colour-coded map format. Since then, the development of the Safe System approach to road safety has highlighted the need to optimise the cross sections from a road safety point of view.

Single Vehicle Lane departure (run-off road, head-on) crashes in the rural high-speed state roads are the largest contributor to death and serious injuries on this part of the state network (69%). The annual cost of this trauma is $900M, which is a significant burden on the community both emotionally and financially. It is also recognised that 68% of Killed and Serious Injury (KSI) crashes are not due to deliberate violators of the traffic laws.

Evidence has proven there are a number of treatments which may be applied to greatly reduce these crashes from occurring. Sealing shoulders and installing Audible Edge Lines have shown to substantially reduce the chance of these crash types by between 43% - 67% depending on the existing carriageway formation.

Methodology

The Road & Traffic Engineering and Road Safety Branches within the Planning and Technical Services Directorate developed a methodology to optimise the safety

performance by modifying the carriageways for the rural high-speed network. The variations tested are as below.

- Do nothing case
- "2031" cross section based on Austroads requirements (previous approach)
- "2031" cross section based on the optimised Austroads Option (by fully sealing the shoulders of above)
- Interim Option (fulling sealing the shoulders of the existing formation – i.e., no widening of carriageway)

In addition to cross sectional changes, a one metre wide median treatment with audible centre lines was assessed on high volume heavy vehicle routes and routes that already exhibit a high number of head-on crashes. These routes include:

- Great Eastern Highway (Metropolitan Boundary to Northam)
- Great Northern Highway (Muchea- Wubin)
- South Western Highway (Metropolitan Boundary - Donnybrook)
- Coalfields Highway
- Bussell Highway (Vasse - Margaret River)
- Toodyay Road (Metropolitan Boundary to Toodyay)
- North West Coastal Highway (Karratha- Roebourne)

The assessment utilised current research (Austroads, ARRB, C-MARC, NZTA, ANRAM) to determine Crash Modification Factors (CMF) to predict the reduction in KSI lane departure crashes that are either Head-On, Hit Object or Roll-Over in nature. These types of crashes are the only ones that are likely to be influenced by a change in cross section. A summary of the assessment is shown in Table 1.1 below.

Scenario	Based on 2031 traffic		Based on unit rates	Based on existing formation	NPV savings ($000,000)	BCR
	Percentage reduction in KSIs	Number - Reduction in KSI / pa	Estimated Expenditure ($ 000,000)	Formation widening reqd. (km)		
Do Nothing Case	+14%	+35	0	0	-425	0
Austroads Cross	12%	31	2,950	9860km	-994	0.30
Interim Option	61%	122	872	0	1,278	4.05
Optimised Austroads Option	62%	126	3,148	9860km	237	1.14

Notes: 1. All based on 2031 forecast traffic growth (modelling data).

Table 1.1: Economic Summary of Various Scenarios

Route Strategies

It is important from a road user perspective to apply consistent seal and formation widths across the rural road network. This standardisation is included in the Route and Link Strategies developed by the Network Management Branch. The objective of a Route Strategy is to provide for the development of an agreed corporate Route Vision and Strategy aligned to specific Route Development and Management plans for rural routes in the road network. While a Route Strategy focuses on the long-term development of a route, it necessarily also needs to consider medium and short-term requirements.

Ultimate (2040+) Cross Section

In the medium term, the design criteria described in this supplement, Section 4.2.6 has been applied to identify a "2040+" formation width for each of the rural road links. The seal width for each section has been determined by focussing on single vehicle lane departure crashes and optimising the cross section to reduce the number of KSI crashes to meet the required target value. Consistency between adjacent road sections is also checked.

The widths are not intended to demonstrate the adequacy or inadequacy of the existing seal and formation widths. The nominated cross sections have been confirmed with each Regional Director. The information is provided in the following colour coded maps for each region or may also be sourced through the iMaps Portal Data catalogue under "RSA Rural Cross Section – Ultimate (2040+) Formation".

- Ultimate (2040+) Seal & Pavement Widths - Kimberley Region
- Ultimate (2040+) Seal & Pavement Widths - Pilbara Region
- Ultimate (2040+) Seal & Pavement Widths - Mid West - Gascoyne Region
- Ultimate (2040+) Seal & Pavement Widths - Wheatbelt Region
- Ultimate (2040+) Seal & Pavement Widths - Goldfields - Esperance Region
- Ultimate (2040+) Seal & Pavement Widths - South - West Region
- Ultimate (2040+) Seal & Pavement Widths - Great Southern Region
- Ultimate (2040+) Seal & Pavement Widths - South - West Area
- Ultimate (2040+) Seal & Pavement Widths - Western Australia

These cross sections are to be applied when single carriageway road upgrades are proposed unless formal approval for an alternative cross section (e.g., an Interim Cross Section) has been received from the relevant Executive Director or is in accordance with an approved route or link strategy. Note that these seal and formation widths do not apply where a dual carriageway is proposed. For guidance associated with rural bridge widths refer to Section 11 of the Bridge Branch Design Information Manual.

Interim Cross Section

An Interim option was developed based on optimising the existing formation, predominantly by sealing the unsealed shoulders. As indicated in Table 1.1, this is expected to give a good benefit to cost ratio. The Interim option cross sections are provided in the following colour coded maps for each region or may also be sourced through the iMaps Portal Data catalogue under "RSA Rural Cross Section – Ultimate (2040+) Formation".

- Interim Seal & Pavement Widths 2040 - Kimberley Region
- Interim Seal & Pavement Widths 2040 - Pilbara Region
- Interim Seal & Pavement Widths 2040 - Mid West - Gascoyne Region
- Interim Seal & Pavement Widths 2040 - Wheatbelt Region
- Interim Seal & Pavement Widths 2040 - Goldfields - Esperance Region
- Interim Seal & Pavement Widths 2040 - South - West Region
- Interim Seal & Pavement Widths 2040 - Great Southern Region
- Interim Seal & Pavement Widths 2040 - South - West Area
- Interim Seal & Pavement Widths 2040 - Western Australia

These cross sections are only to be applied when the available funding is insufficient to develop the "2040+" cross sections or where the funding source is specifically targeting an "Interim" option. It is important that consistency between adjacent road sections is maintained unless a natural transition occurs through a major intersection or townsite. The use of this option requires approval of the relevant Executive Director unless it is in accordance with an approved route or link strategy.

For ease of assessment, a Table showing the required "Interim" and Ultimate "2040+" Cross Sections for each Road has also been developed.

Freeway Cross Sections

The following typical cross sections outline several "ultimate" layouts and demonstrate how intermediate stages can nest with the long term (All Lane Running) solution. Note that in each case, the ultimate is based on the premise of fully functioning "Smart Freeway" operations. Until then the outer shoulder is required for safety, and to facilitate subsequent traffic management during construction activities associated with staged widening.

To minimise subsequent relocation of services and other infrastructure, and to avoid later land acquisition, the outer edges of the cross section should be defined at the outset, allowing the future widening to occur into the median. This is especially important at interchanges to ensure that there is no need to relocate / modify ramps, drainage, lighting, etc as part of any widening activity. This approach also facilitates traffic management during the construction of additional lanes.

With the wider median associated with an interim stage, a semi-rigid barrier is likely to be suitable as there will be adequate displacement / deflection width behind the barrier. For the ultimate cross section however, a concrete barrier is expected to be required due to limited space behind the barrier. In some instances, it may be appropriate to have a median comprising a concrete barrier alone.

In determining the ultimate width of median, consideration must be given to all facilities that may need to reside in this space. These may include the necessity to accommodate bridge piers; Smart Freeway or other gantries; drainage in areas of freeway superelevation; lighting; and/or future public transport infrastructure. In these circumstances, the ongoing maintenance requirements of all such infrastructure must be understood, with appropriate servicing procedures embedded in guidelines for future application. In cases of freeway superelevation, the flow width associated with drainage runoff should be considered to ensure that flow against a concrete barrier does not detrimentally affect friction requirements in the adjacent traffic lane.

Where the outer edge of pavement is kerbed, the width of drainage flow path must be considered to minimise the likelihood of aquaplaning in the kerbside lane. The drainage design should be based on the ultimate configuration.

The ultimate width of median shoulder also needs to address the sight distance constraints that may occur around horizontal geometry when a concrete barrier is in place. The absolute minimum sight distance that can be applied is that associated with enabling drivers to see the tail/stop lights of vehicles ahead, in order to minimise the risk of tail end crashes. Refer to Section 5.5 of the Austroads Guide to Road Design Part 3 (2021).

Emergency Stopping Bays are a requirement on all freeway standard roads. Refer to the "Emergency Stopping Bays and Roadside Help Phones" guidelines for more details.

Emergency Stopping Bays are a critical safety and operational element with All Lane Running solutions, and the locations, configuration and spacing of these should be identified in the first stage. It should be noted that the spacing for Emergency Stopping Bays under All Lane Running conditions is significantly less than under normal conditions. i.e., Emergency Stopping Bays are spaced much more closely under All Lane Running conditions.

Figure 1.3: Provision for 3 Lane Ultimate Configuration

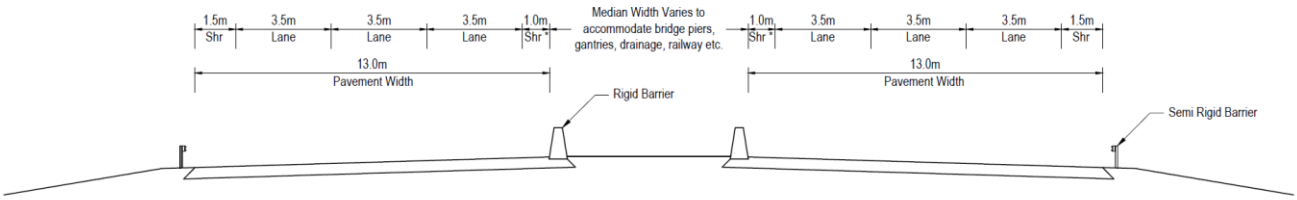

3 Lane Ultimate Configuration - All Lane Running With Smart Freeway Control

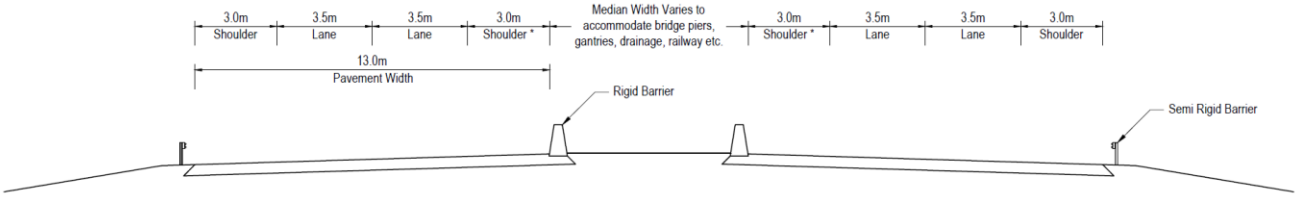

First Stage 2 Lane Freeway (With or Without Smart Freeway Control)

* Subject to adequate sight distance around curves

Figure 1.4: Provision for 4 Lane Ultimate Configuration

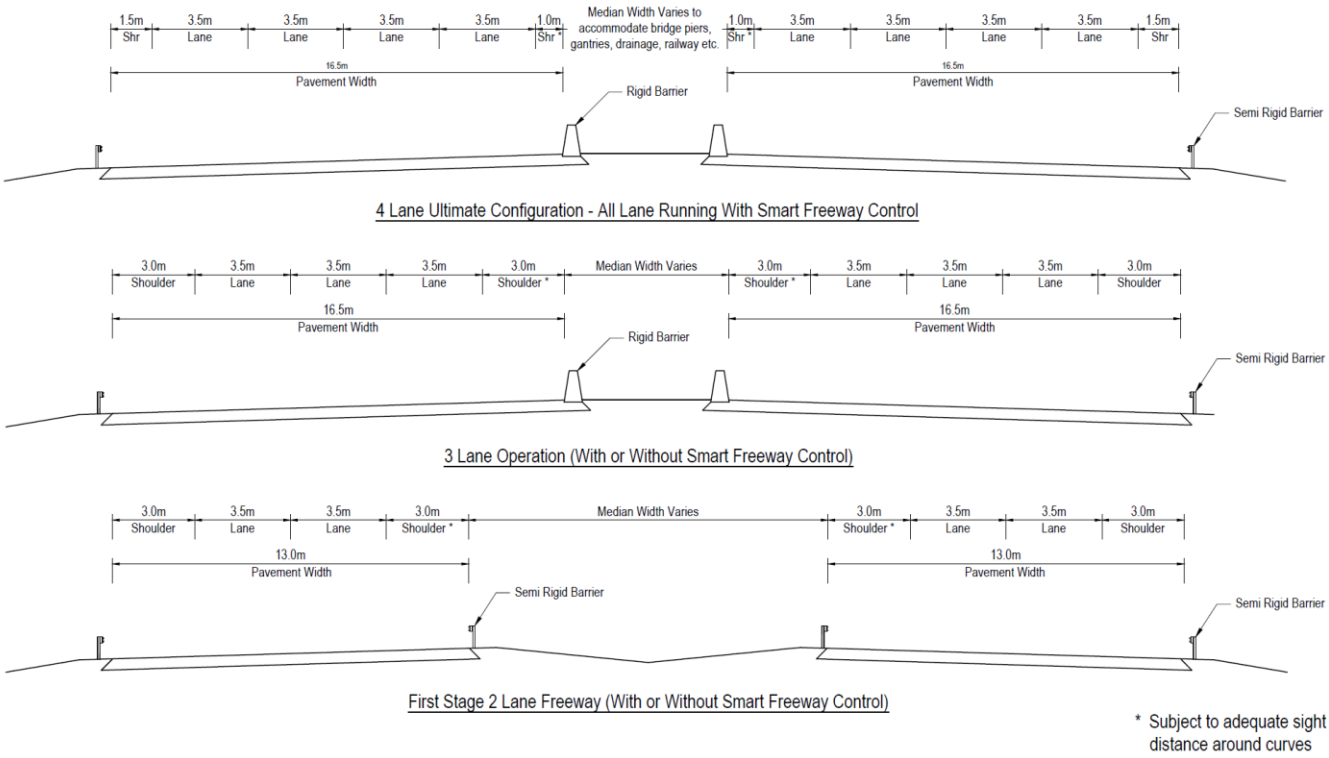

Figure 1.5: Provision for 5 Lane Ultimate Configuration

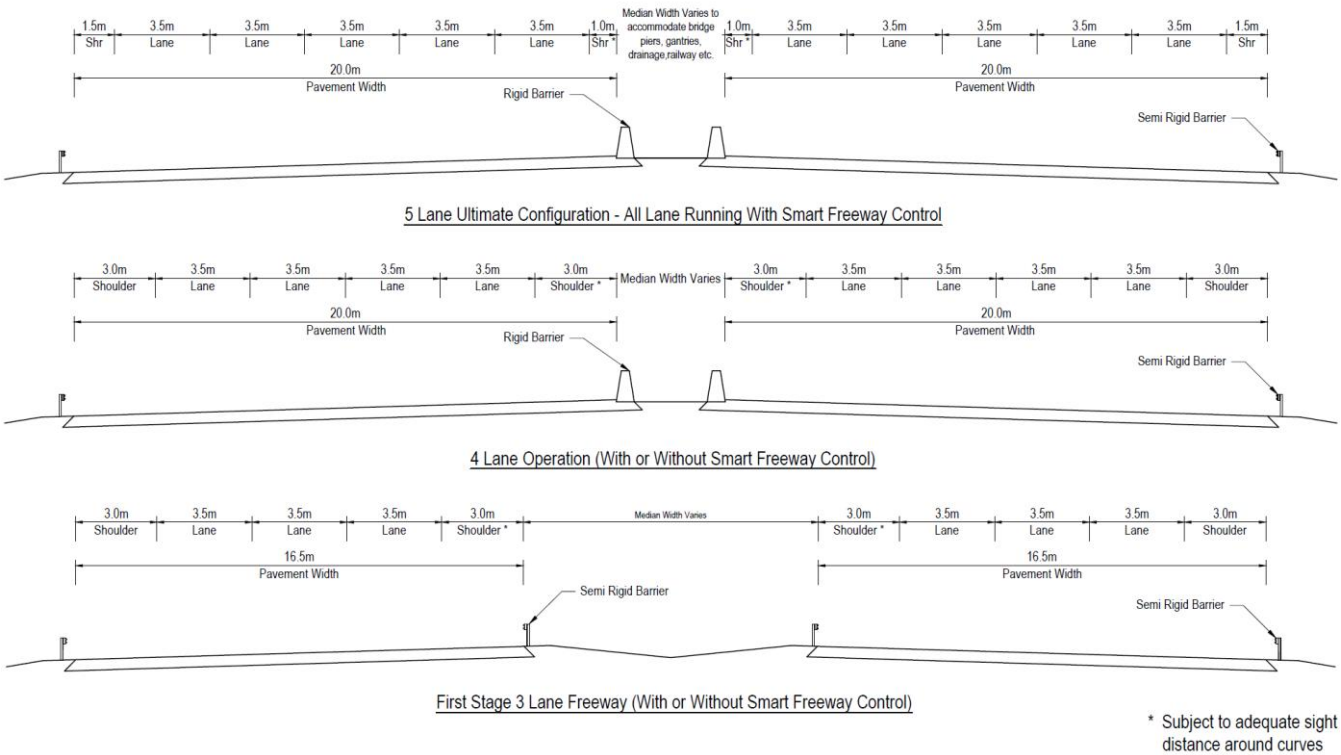

4.1 General

The Designer should ensure that the use of the available space within the road reserve is balanced to achieve the fundamental design objectives when determining the cross section. Refer also to Seal and Shoulder Widths outlined in Section 4.1A above.

The width and crossfall of traffic lanes and shoulders are based on traffic needs and drainage requirements. The form of the remainder of the cross section, namely the batter slopes of embankments and cuttings, depends on the type of material to be placed or excavated, safety and environmental factors and the importance of the road.

For typical cross section terminology, refer to Figure 4.2 below and the Main Roads Glossary of Technical Terms guideline.

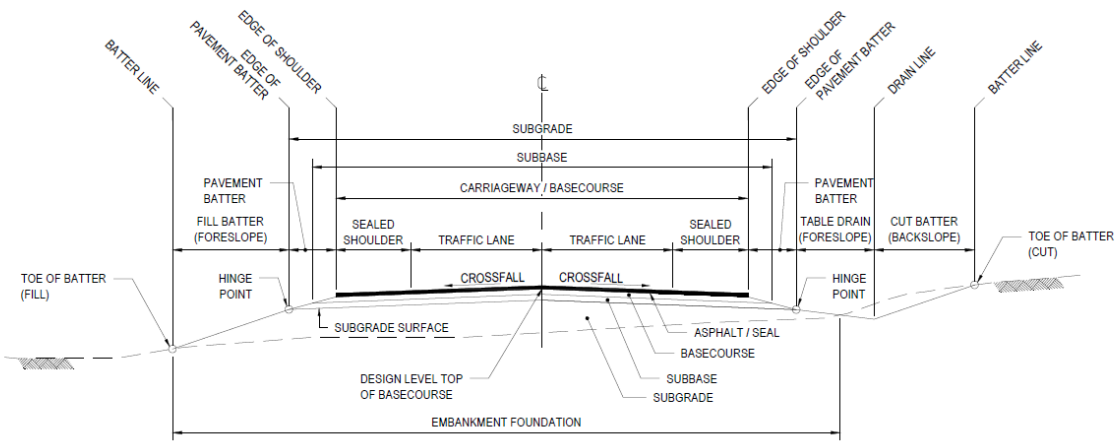

CROSS SECTION TERMINOLOGY - RURAL ROAD UNKERBED SINGLE CARRIAGEWAY

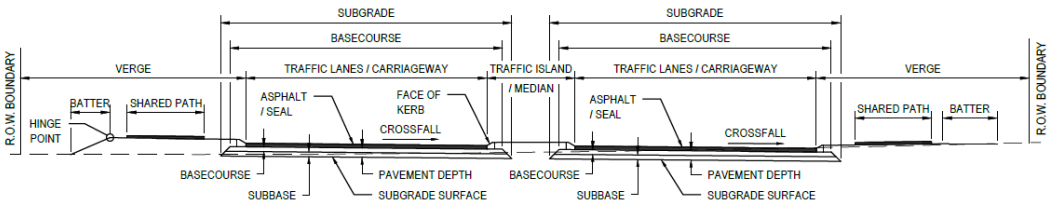

CROSS SECTION TERMINOLOGY - URBAN ROAD KERBED DUAL CARRIAGEWAY

Figure 4.2: Typical Cross Section Terminology – Rural and Urban Roads

4.2.3 Crown Lines

Main Roads preferred practice is to improve superelevation rollovers to reduce flow path length and the subsequent film depth in accordance with the solutions outlined in Austroads Guide to Road Design (GRD) Part 3: Section 7.7.13. Where this is not achievable then staggered crowns may be investigated.

The following additional guidance should be considered:

- On freeways and highways, staggered crown lines should be located on tangent sections, away from approaches/departure from entries/exits where vehicles are more likely to be changing lanes.
- Crown lines should be limited to one per carriageway.
- Crown lines must not be located in traffic lanes of either the project case or ultimate case design, i.e., the crown must be located on either edge line or lane lines of the carriageway in both cases.

4.2.5 Urban Road Widths

Where site constraints preclude the use of the desirable standard width, consideration may be given to reducing the traffic lane width to 3.3 m as a "Departure from Standards", subject to the approval of MRTE.

Where a section of road is part of a RAV route, the minimum lane width should be in accordance with the appendices in the document Standard Restricted Access Vehicle Route Assessment Guidelines.

Element	Lane width (m)	Comments
General traffic lane	3.5	General traffic lane width to be used for all roads
	3.0 – 3.4	For use on low speed roads with low truck volumes
Service road lane	3.4 – 5.5	Range of lane widths on service roads (Refer to Section 4.12)
Wide kerbside lane	4.2	Locations where there is high truck volumes (Additional width provided for trucks)
	4.2 – 4.5	Locations where motorists and cyclists use the same lane (Refer to Section 4.9.11 and Commentary 6)
HOV lane	3.5 – 4.5	Bus lane (Refer to Section 4.10.2)
	3.3	Tram/light rail vehicle lane (Refer to Section 4.10.3)
Minimum width between kerb and channel (to provide for passing of broken down vehicles)	5.5 – 6.0	Width of a single kerbside lane suitable for use in a left turn slip lane, or two lane two way divided road with a raised median, is 6.0m (desirable) or 5.5m (absolute minimum).
	2 x 4.0 (8.0)	Width of two lanes that provide for two lines of traffic to (slowly) pass a broken down vehicle

Table 4.3 – Urban Arterial Road Widths

Element	Lane width (m)	Comments
General traffic lane [1]	3.5	General traffic lane width
Lane width on interchange ramps	3.5 – 4.5	Range of lane widths on interchange ramps, (refer to the Guide to Road Design Part 4C (Austroads 2023))
Left shoulder [2][3][4] (Sealed for the full width)	3.0	Minimum shoulder width adjacent to a safety barrier Minimum shoulder width on freeways of three or more lanes
Median shoulder [2][3][4] (Sealed for the full width)	3.0	Minimum shoulder width adjacent to a safety barrier Minimum shoulder width on freeways of three or more lanes

Table 4.4 – Urban Freeway Widths

Notes:

1. *Shoulder widths may be locally narrowed where there are overpass bridge piers or similar large constraints. Designers should maintain at least minimum clearances/offsets from traffic lanes to barriers where locally narrowing shoulders.*
2. *A reduced shoulder width may be considered for All Lane Running scenarios (with Lane Use Management Systems), or local narrowing for bridges / piers, and the like where the minimum is governed by the barrier offset.*
3. *The median shoulder will typically be 3m wide as shown in Figures 1.3, 1.4 and 1.5 of this Supplement unless additional width is required to accommodate barriers or sight distance as described in Section 5.5 of Austroads GRD Part 3.*

4.2.6 Rural Road Widths

The proposed cross sections for rural roads on the state road network are given in Section 4.1A. The basic road cross sections for rural and outer urban roads are shown in Table 4.5 below. This table differs from Table 4.5 in GRD Part 3 in the following respects:

- AADT is calculated based on Passenger Car Equivalents instead of AADT. The Passenger Car Equivalents (PCEs) for large vehicles shown in Table 4.5.1 are used to convert vehicles / day to PCUs / day.
- Unsealed shoulders are replaced by sealed shoulders. The reason for this is two-fold: (a) sealed shoulders generally have lower maintenance and Whole of Life Cycle Costs, and (b) research has shown that sealed shoulders up to 2.0m wide have a significant reduction effect on run-off-the-road and head-on KSI crashes.

Element	Design (PCUs / day)			
	150 - 500	**500 - 1000**	**1000 - 3000**	**3000 - 8000**
Traffic lanes [1]	7.0m (2 x 3.5)	7.0m (2 x 3.5)	7.0m (2 x 3.5)	7.0m (2 x 3.5)
Total shoulder	1.0m	1.5m	1.5 or 2.0m	2.0 or 2.5m
Minimum shoulder seal [2][3][4][5][8]	1.0m	1.5m	1.5 or 2.0m	2.0 or 2.5m

Wide centreline [8]	N/A	N/A	None or 1m	None or 1m
Total carriageway	9.0m	10.0m	11.0m	12.0m

Table 4.5 – Single Carriageway Rural Road Widths

Notes:

1. *Traffic lane widths are measured from the centre of the relevant linemarking.*
2. *Where significant numbers of cyclists are expected to use the shoulders, consideration should be given to using a maximum size 10 mm seal within a 20 km radius of towns.*
3. *Wider shoulder seals may be appropriate depending on requirements for maintenance costs, soil and climatic conditions or to accommodate the tracked width requirements for Large Combination Vehicles.*
4. *Where verge barriers are installed, short lengths of wider shoulder seal or lay-bys may need to be provided at suitable locations to provide for discretionary stops in terms of Clause 6.3.5 of the Supplement to GRD Part 6.*
5. *Full width shoulder seals are required adjacent to safety barriers along unkerbed roads and may be appropriate on the high side of superelevation.*
6. *Design traffic comprises the traffic volume that is expected to be using the road at the end of the design period (generally 20 years) and includes passenger car equivalents for large vehicles. Passenger car equivalents for large vehicles in Table 4.5.1 are based upon work undertaken for the National Road Transport Commission.*
7. *A wide centreline treatment should be considered where there is a history of head-on crashes. Generally, this only occurs when traffic volumes exceed 5000 – 6000 PCUs / day.*
8. *Where a 1 m wide centreline is required, the shoulders are reduced by 0.5 m on both sides.*

AUSTROADS Bin (Vehicle Class)	PCEs
2-5	2
6-9	3
10-11	4
12	5

Table 4.5.1: Passenger Car Equivalents for Large Vehicles

Element	Design (PCUs / day)	
	8 000 – 20 000	**> 20 000**
Traffic Lanes [1]	3.5	3.5
Shoulder		
Left	2.5	3.0
Median	1.0	1.0
Shoulder seal [2, 3]		

Left	1.5	3.0
Median	1.0	1.0

Table 4.6 – Divided Carriageway Rural Road Widths

Notes:

1. *Traffic lane widths are measured from the centre of the relevant linemarking.*
2. *Wider shoulder seals may be appropriate depending on requirements for cyclists, maintenance costs, and soil and climatic conditions.*
3. *Full width shoulder seals are appropriate beside road safety barriers and on the high side of the superelevation.*

For minimum freeway ramp widths refer to Main Roads Supplement to Austroads GRD Part 4C: Interchanges (2023). For unsealed roads refer to the ARRB Unsealed Roads Manual; Guidelines to Good Practice - March 2009 edition.

Road widths for designated Oversize Over Mass (OSOM) routes are not dependant on AADT or Design Traffic. For information relating to OSOM routes and design requirements refer to Design of Oversize and Over-Mass Vehicle Corridors guideline.

4.3 Shoulders

4.3.2 Width

Wider shoulders may be needed where road safety barriers are required. Refer to Section 6 in the Supplement to Austroads GRD Part 6 for more detailed information.

All bridge cross sections should be determined on a case by case basis in accordance with Bridge Branch Design Information Document No. 3912/02, Section 11 - Bridge Widths.

4.3.5 Shoulder Crossfalls

Main Roads preferred practice is not to steepen or flatten unsealed shoulders adjacent to sealed traffic lanes.

4.3.6 Pavement Batters

Pavement batters are used for unkerbed road construction. They should be of a constant width that is dependent on the batter slope and depth of pavement as shown in Figure 4.12.1. The constant width of the pavement batter aids in the set-out and construction of the pavement layers.

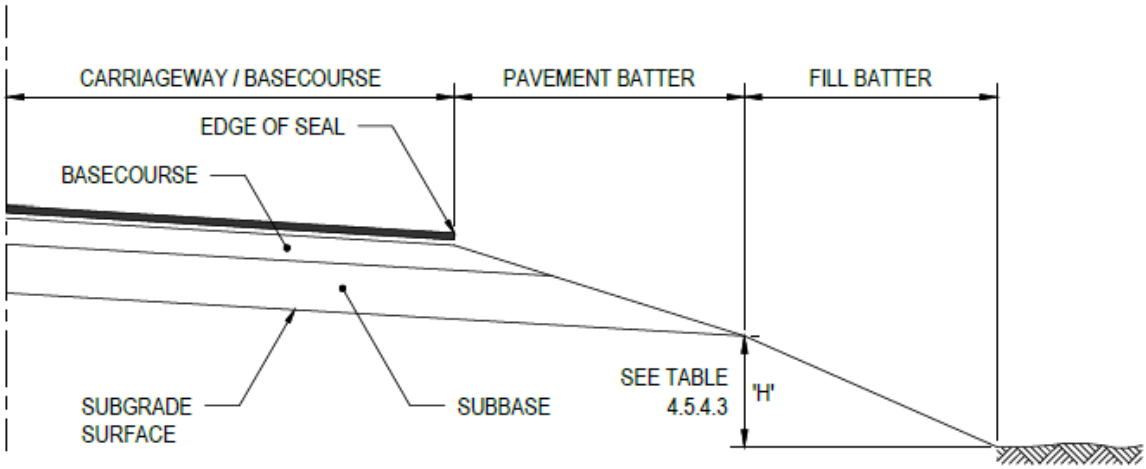

Figure 4.12.1: Pavement Batter Detail

Pavement batter widths shall be adopted for the various depths as shown in Table 4.12.2.

Pavement Depth (mm)	Pavement Batter Width (mm)
150	900
175	1050
200	1200
225	1350
250	1500
275	1650
300	1800
325	1950
350	2100
375	2250
400	2400
425	2550
450	2700
475	2850
500	3000

Table 4.12.2: Pavement Batter Widths

4.4.4 Kerb Backfill

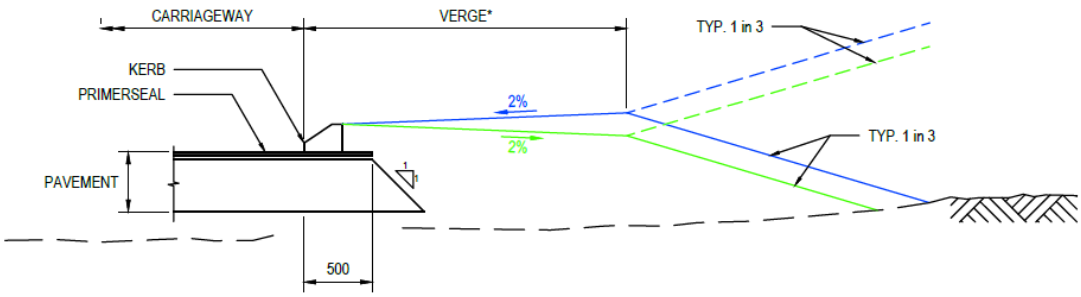

* Minimum 2.5m where there is street lighting, otherwise 2.0m

Figure 4.12.3: Typical Verge and Kerb Detail

4.4.5 Roadside Items and Traffic Management Systems

Adequate shoulder width should be provided for the location of Roadside Items and Traffic Management Systems. Electrical Assets required for consideration may include but not be limited to: Closed Circuit Cameras (CCTV), Help Phones (Emergency Telephones), Intelligent Transport Systems (ITS), Lighting and Variable Message Signs (VMS).

For specific requirements refer to Main Roads Roadside Items and Traffic Management Guidelines or Specifications such as:

- Closed Circuit Cameras – Vehicle Detector System
- Design and Installation of Help Phones (Emergency Telephones)
- Lighting Design Guidelines for Roadway and Public Spaces
- Guidelines for Variable Message (VMS) Sign Control

Table EA lists the possible sizes of CCTV cabinets, ITS trench, lighting poles set back distance and general slab sizes of Help Phones (Emergency Telephones). The values in Table EA are typical, specific values should be checked against Main Roads Roadside Items and Traffic Management Guidelines.

CCTV Cabinet (Refer to Main Roads Drawing 0648-3015)	600 L x 400 W x 1200 H
CCTV Double Cabinet (Refer to Main Roads Drawing 0648-3016)	1200 L x 500 W x 1200 H
Typical Trench Cross Section and Cable Pit Configuration for ITS (Refer to Main Roads Drawing 200431-0081)	500mm W min x 500mm Depth min
Roadway Lighting Pole Set Back, for straight and curved kerbed roads (Refer to Main Roads Lighting Design Guideline for Roadway and Public Space, Section 2.1.10)	Poles shall be set back at least 1.5m from the vertical face of the kerb or edge or carriageway. Lighting Mounting Height of 13.7m. Refer to Main Roads Standard Drawing 200231-0063 for Pole Orientation, required area behind the Light Pole, 2000mm min.
Roadway Lighting Pole Set Back, where there are no kerbs (Refer to Main Roads Lighting Design Guidelines for Roadway and Public Spaces, Section 2.1.10)	The set back of the pole shall not be less than 3m from the edge of the traffic lane and 1.5m from the edge of shoulder. Lighting Mounting Height of 13.7m. Refer to Main Roads Standard Drawing 200231-0063 for Pole Orientation, required area behind the Light Pole, 1500mm Typical.
Roadway Lighting Pole Set Back, where there is a barrier (Refer to Main Roads Lighting Design Guidelines for Roadway and Public Spaces, Section 2.1.10)	The set back of the pole shall be at least equal to the dynamic deflection of the barrier, but no less than 1m from the barrier in a direction away from the road. Lighting Mounting Height of 13.7m. Refer to Main Roads Standard Drawing 200231-0063 for Pole Orientation, required area behind the Light Pole, 2000mm min.
Roadway Lighting Pole Set Back (Refer to Main Roads Lighting Design Guidelines for Roadway and Public Spaces, Section 2.1.10)	On no account shall the pole be mounted on the road shoulder. Lighting Mounting Height of 13.7m.
Roadway Lighting Pole Set Back, for Roundabouts and medians (Refer to Main Roads Lighting Design Guidelines for Roadway and Public Spaces, Section 2.1.12)	Lighting poles shall not be installed in the centre of roundabouts or around the periphery of the raised island of the roundabout. Lighting shall not be installed in medians or raised islands. Lighting Mounting Height of 13.7m. If it is unavoidable, then AS/NZA 1158.1.3 shall be strictly followed.
Roadway Lighting Pole Set Back, for Intersections (Refer to Main Roads Lighting Design Guidelines for Roadway and Public Spaces, Section 2.1.13 and 2.2)	Various overhang values used by Main Roads shall be 0.0, 1.5, 2.5, 3.5 and 4.5m. Lighting Mounting Height of 13.7m.
Public Spaces (Pathways and Cycle Ways) Lighting (Refer to Main Roads Lighting Design Guidelines for Roadway and Public Spaces, Section 2.3)	Desirable pole set back should be 1.0m from edge of path. Pedestrian Mounting height of 7.0m. Outreach length for pedestrian lighting is to be 0.0 to 1.5m.
Emergency Telephones General Slab Size, (Refer to Main Roads Drawing 9220-0670)	3500 W x 2200 L Spacing between telephones range from 200m to 1000m. (Refer to Section 3.2 of Main Roads Design and Installation of Help Phones (Emergency Telephones))

Table EA: - Possible Sizes and Set Back Distance for Electrical Assets

4.5 Batters

4.5.4 Main Roads Typical Batters

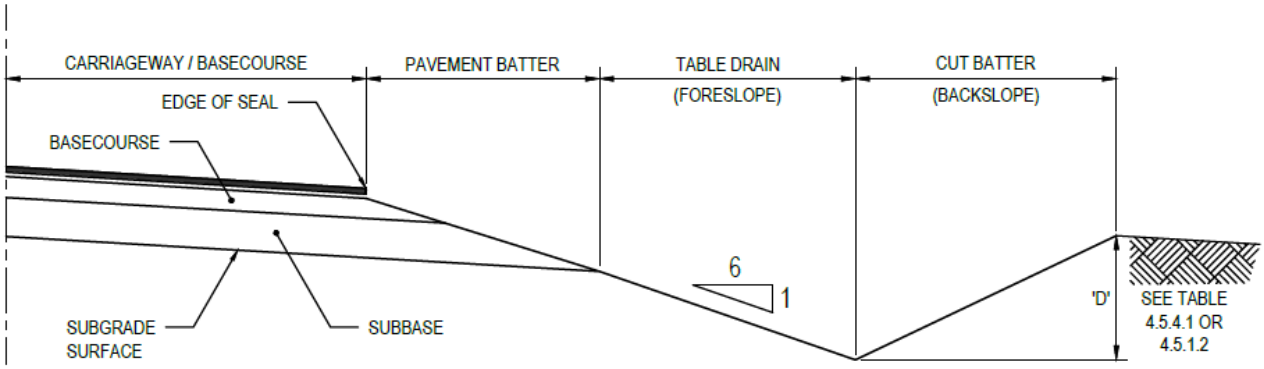

Figure 4.5.4.1 Typical Section in Cut with Table Drain

Depth 'D'	Slope (H to V)
0 to 2500	4 to 1[(i)]
2500+	3 to 1[(ii)]

Table 4.5.4.1 - Desirable Earth Cut Batters

(i) Transition from 4 to 1 to 3 to 1 should occur over 20m.
(ii) Batters 3 to 1 or steeper will generally require road safety barriers.

Depth 'D'	Slope (H to V)
0 to 1000	1 to 1[(i)]
1000+	0.5 to 1

Table 4.5.4.2 - Desirable Rock Cut Batters

(i) Transition from 1 to 1 to 0.5 to 1 should occur over 20m.

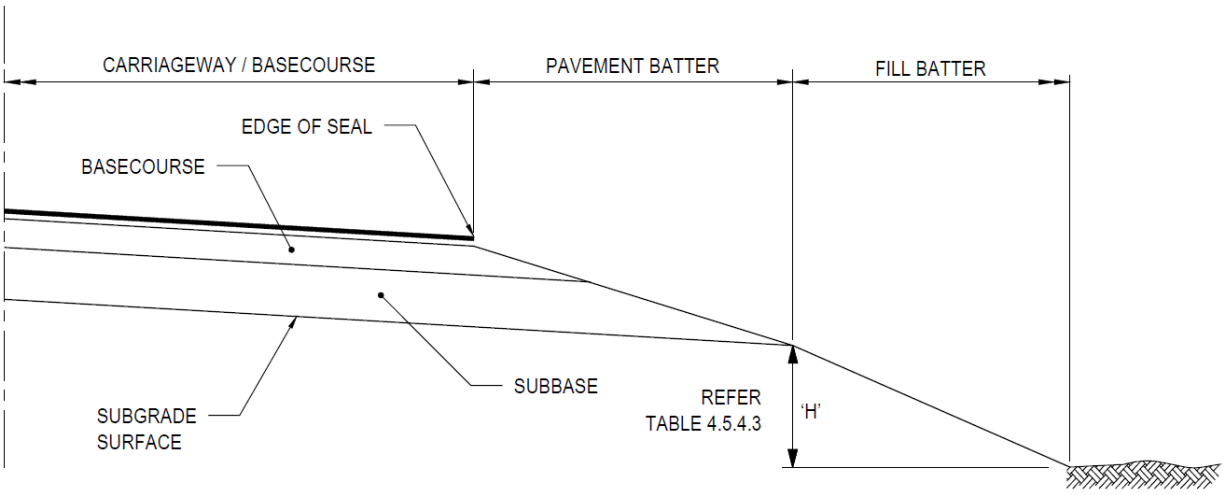

Figure 4.5.4.2 Typical Section in Fill

Height 'H'	Slope (H to V)
0 to 300	1.8m table drain
300 to 1000	6 to 1[(i)]
1000+	4 to 1

Table 4.5.4.3 – Desirable Fill Batters

(i) Transition from 6 to 1 to 4 to 1 should occur over 20m.

Batter slopes steeper than 1:4 should be assessed for road safety barrier treatment. Steeper batters are more difficult to re-vegetate and maintain.

4.6.4 Kerb and Channel

Kerb and channel are typically not used by Main Roads.

Refer to Standard Drawing No. 9331-0376 for Main Roads kerb types.
Refer to Standard Drawing No. 9331-0377 for Main Roads kerb treatments.

4.8 Bicycle Lanes

4.8.1 General

It is not Main Roads practice to use kerb and channel for drainage purposes, therefore widths specified for exclusive bicycle lanes shall be taken from the face of the adjacent left hand kerb.

State Roads in Urban Environments

Cyclists are permitted to ride on urban state roads except freeways unless otherwise signed.

New or widened roads shall be constructed with sealed shoulders that are continuous through intersections. Alternatively, a shared path constructed adjacent to the road may be deemed more appropriate. (Refer to Austroads GRD Part 6A: Pedestrian and Cyclist Paths - 2017). Where neither option is possible, an alternative route with cycling facilities that meet the requirements of the relevant guidelines for on road cycling shall be identified and appropriately signed on parallel roads subject to the agreement of the Local Government Authority.

On existing roads, the facilities described above for new roads will only be provided in conjunction with any upgrades involving widening of the road, and where land is available within the existing road reserve or if land is being resumed for other purposes.

State Roads in Rural Environments

On new or widened rural roads, the following factors shall be considered when assessing cycling facility requirements:

- The safety and security of all road users; considering the volume, type (with particular emphasis on heavy vehicles) and speed of motor vehicles and the potential for user conflict.
- Trip purpose and usage of the road. Consider whether the road provides a connecting link for community access, and the level of use by cyclists. Where daily cyclist volumes are greater than 25, specific cycling facilities should be installed.

Cycling facilities on rural roads shall be to the same standards as those required for urban state and main roads.

No specific provision shall be made for cyclists on unsealed roads under the responsibility of Main Roads.

4.8.9 Sealed Shoulders

Austroads GRD Part 3 implies that the use of sealed shoulders for cyclists is for unkerbed roads. Sealed shoulders are Main Roads predominant on-road cycling facility and are applicable to both kerbed and unkerbed roads.

4.9 High Occupancy Vehicle (HOV) Lanes

Bus lanes are typically installed as the kerbside (left most) lane, where cyclists predominantly travel. Wider kerbside bus lanes are not specifically provided unless there are found to be high numbers of cyclists and buses sharing the lane.

4.12 Bus Stops

For information relating to bus stops refer to Main Roads Supplement to Austroads GRD Part 4: Intersections and Crossings General.

5 SIGHT DISTANCE

5.1 General

A reaction time of 1.5 seconds shall not be used in Western Australia.

When deriving stopping sight distances for cars on sealed roads as shown in Austroads GRD Part 3 (2016) Table 5.5 a coefficient of deceleration (d) of 0.36 shall be used in Western Australia.

For Approach Sight Distance (ASD) and Safe Intersection Sight Distance (SISD) requirements refer to Main Roads Supplement to Austroads GRD Part 4A: Unsignalised and Signalised Intersections.

5.3.2 Truck Stopping Sight Distance

Austroads Figure 5.3: Trucking Stopping Sight Distance shows a vertical clearance of 5.3m. This is a nominal figure only and should not be used as an acceptable vertical clearance for all structures.

For more specific requirements relating to vertical clearances refer to Chapter 8.2.4.

5.4.1 Benching for Visibility on Horizontal Curves

In cut situations the required line of sight should not encroach beyond the invert of the table drain as over time the growth of vegetation may reduce the effective line of sight.

5.5.2 Requirements where there is no Line of Sight over Roadside

The maximum Coefficient of Deceleration to be adopted for this section is 0.46. When used in combination with a reaction time of 2.0 seconds, a “Departure from Standards” is subject to the approval of the Manager Road & Traffic Engineering (MRTE).

6 COORDINATION OF HORIZONTAL AND VERTICAL ALIGNMENT

6.2 Safety Considerations

The design speed of the road in both the horizontal and vertical planes should generally be the same. A reduction in the vertical design speed (compared to the proposed horizontal design speed) should be treated as an Extended Design Domain design and should only be considered when,

- the terrain is such that significant cost reductions may be achieved, or
- use of the Normal Design Domain design speed will result in unacceptable environmental or heritage impacts, and
- an Extended Design Domain report has been prepared and approved by the Manager Road & Traffic Engineering. The supporting documentation should determine the risks and proposed measures to address them.

It should be noted that lack of sight distance is not a significant control on driver speed. Drivers tend to maintain their speed over crests or around horizontal curves regardless of the distance they can see ahead. Most drivers must see a hazard to be aware of it, few anticipate one.

The vertical design speed shall not be reduced in the vicinity of intersections. In the intersection zone sight distance to a zero object height shall always be achieved.

6.4 Drainage Considerations

To ensure adequate kerbside drainage, the following minimum longitudinal grades shall be used:

- 0.5% Desirable minimum
- 0.3% Absolute minimum

For specific details relating to drainage considerations refer to the Austroads Guide to Road Design Part 5A Drainage: (2013).

Grades lower than the desirable minimum value of 0.5% shall only be adopted as a "Departure from Standards" and is subject to the approval of MRTE.

7 HORIZONTAL ALIGNMENT

7.5.1 Compound Curves

In the direction of travel the ratio of the flatter radius to the sharper radius should not exceed 1.5:1. A maximum ratio of 2:1 may be used at intersections and ramps. (Reference: A Policy on Geometric Design of Highways and Streets", AASHTO, 2004, p201.)

7.5.4 Transition Curves

Before a curve radius is finally selected it is generally necessary to consider the transitions. Two types of transitions are generally required.

- A plan transition maybe required to give a gradual change in curvature from zero on the tangent to a value corresponding to the circular curve radius. The curve used by Main Roads for this purpose is the clothoid spiral.
- A superelevation transition is required to give a gradual change in cross section shape from a crowned or one-way crossfall section on the tangent to the superelevation section on the curve.

The practice now adopted by Main Roads is consistent with that described in Austroads Guide to Road Design Part 3 (2021).

7.6 Side Friction and Minimum Curves Sizes

Due to the low thresholds set by Austroads Publication No. AP-R211, 2002 of when to design horizontal curves for trucks, Main Roads considers all roads should be designed to accommodate trucks. For this approach a single set of side friction factors (SFF) which accommodate both cars and trucks have been developed to be used in road design.

In general, SFFs for cars are adopted unless the static rollover threshold (SRT) for trucks governs. Absolute SFFs are obtained by dividing the SRT of 0.35 by 1.15 which allows for steering fluctuations in curves. The desirable SFFs have been developed by adopting the average margin of safety used for cars (0.06) between 40 and 60 km/h. Refer to Table 7.5 for SFFs for both cars and trucks; these values are also adopted in the current Horizontal Curve Tables.

Design Speed (km/h)	*f*	
	Cars and Trucks	
	Des max	Abs max
30	0.24	0.30
40	0.24	0.30
50	0.24	0.30
60	0.24	0.30
70	0.19	0.30
80	0.16	0.26
90	0.13	0.20
100	0.12	0.16
110	0.12	0.12

Table 7.5: Recommended Side Friction Factors for Cars and Trucks

Notes:

1. *The SFF values in the table consider the effects of car/truck speed relationship and therefore no specific design speed for horizontal curves needs to be adopted for trucks.*

7.6.1 Minimum Radius Values

Where the adopted design speed for a freeway or controlled access highway is 100km/h or greater and it is expected that it will be operating at more than 85% of the theoretical design capacity for more than three days per week during peak periods during the design life of the asset, a minimum horizontal curve radius of 750m shall be adopted for design. This criteria avoids horizontal geometry adversely impacting the operational performance of a freeway or controlled access highway as discussed in Austroads Guide to Smart Motorways 2016.

7.7.3 Maximum Values of Superelevation

Main Roads general maximum superelevation is limited to 6%. Values greater than 6% within the Main Roads Horizontal Curve Tables are for superelevation on turning roads and loop ramps. The absolute maximum superelevation for turning roads and loop ramps is 10%. Maximum values of superelevation are listed in Table 7.8.

Heavily laden or slow-moving vehicles limit the maximum acceptable value of superelevation. The Designer should consider the types of vehicles using the road and limit the acceptable maximum superelevation to ensure their safety. Superelevation should be limited to 6% where there is a likelihood of vehicles stopping on the ramp - e.g., due to smart freeways.

7.7.13 Development of Superelevation to Avoid Drainage Problems

The following guidance should also be considered:

- Increased rate of rotation.
- The use of adverse crossfall in accordance with section 7.8 to eliminate superelevation rollover and the risk of aquaplaning.
- Avoid superelevation rollovers in vertical sags or crests as noted in Austroads GRD section 8.5.6.
- The relocation of superelevation rollovers to a tangent section with sufficient vertical grade to achieve compliant film depths.
- Rotating pavement about one edge or the other, ensuring that the geometry has been applied correctly (refer to Figure 7.22):
    - Gradient of the centreline is the same on each side to the transition.
    - Ensure there are no changes in grade within the transition (drawing a line along the carriageway edge in the profile assists when reviewing this)
    - Vertical curves along the centreline match the superelevation rounding curves in terms of location and length.

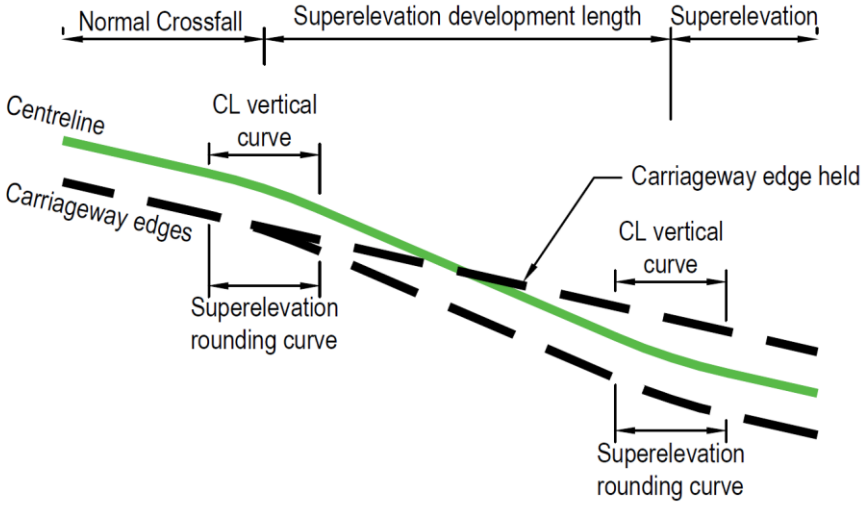

Figure 7.22: Rotating around the edge

7.7.15 Superelevation on Bridges

Bridge Designers prefer that bridges are located on straight alignments and grades. If this is not possible, the next best situation is a bridge on constant curvature and crossfall to avoid the need for superelevation transitions on bridges.

7.8 Curves with Adverse Crossfall

Adverse crossfall occurs when the road pavement slopes down from the inside of a curve to the outside of the curve, which is contrary to normal practice. Although adverse crossfall on curves should be avoided, situations arise where this may be necessary.

Main Roads has adopted the following minimum radii for use with 3% adverse crossfall. In some situations, it may be relevant to reduce the adverse crossfall to 2%. For these radii, calculations should use half the desirable maximum f for trucks, based on the values in Table 7.5 from Austroads GRD Part 3.

Design Speed (km/h)	Minimum Radii (m)
30	95
40	170
50	270
60	520
70	850
80	1250
90	1700
100	2250
110	3000

Table 7.12: Recommended Minimum Radii with 3% Adverse Crossfall

The values in Table 7.12 from 30 km/h to 60 km/h are based on using half the desirable maximum f for trucks as per the values in Table 7.5 from Austroads GRD Part 3. The radii for speeds higher than 60 km/h are based on rationalised and historic rationalised values.

7.9 Pavement Widening on Horizontal Curves

For untransitioned curves, it is normal practice to apply all the curve widening to the inside of the curve with the painted centreline then being offset from the control line to provide equal lane widths. This practice aids drivers in making their own transition.

In relation to Table 7.13, Main Roads does not apply curve widening of less than 0.2m.

8 VERTICAL ALIGNMENT

8.1 General

Desirably, vertical points of intersection (VPIs) on straights should be spaced 6V or greater apart in flat terrain. Elsewhere, (i.e., at floodways, structure constraints or to suit the horizontal geometry) the spacing can be reduced as appropriate or to an absolute minimum of 3V, where V is the design speed in km/h. VPIs, and vertical curves should be centred on horizontal curves and in tangent sections and should not be located in plan or superelevation transitions.

Dual carriageways with wide medians in excess of 10 metres provide the opportunity for the development of individual profiles for each carriageway. Each carriageway can be independently graded with narrow medians if barriers and retaining walls are used where required.

8.2.4 Vertical Clearances

The clearances in Table 8.1 are a guide only and will need to be confirmed with Main Roads Structural Engineering Branch, Heavy Vehicle Operations and Heavy Vehicle Policy. Absolute minimum clearance may vary depending on road classification and usage. For specific requirements relating to Oversize Over Mass Vehicles refer to Guide to Design of Oversize Over Mass Vehicle Corridors guideline.

8.2.7 Vehicle Clearances

For specific requirements relating to Vehicle Clearances refer to the Driveways Guideline.

8.5.6 Minimum Grades

Refer to Main Roads Aquaplaning Summary for guidance on potential aquaplaning issues for superelevation rollovers at various longitudinal grades, carriageway widths and pavement texture depths. Refer to section 4.2.3 and 7.7 for guidance on reducing flow path lengths and film depths. Refer to Main Roads Supplement to Austroads GRD Part 5A Section 4 for guidance on compliant film depths.

8.6.1 General

When determining 'K' values, consideration should be given to the stopping sight distance requirement for trucks. At intersections and approaches to intersections, sight distance to a zero-object height is required to enable pavement markings to be visible to the driver.

For specific requirements on floodways refer to the Drainage and Waterways - Floodways guideline.

8.6.3 Crest Vertical Curves

The 'K' value for crest curves should be determined using Table 8.7. A reaction time of 2.5s shall be used as the Main Roads desirable minimum and a reaction time of 2.0s shall be used as the Main Roads absolute minimum.

A 2.0s reaction time should only be adopted on rural roads with the explicit approval of Manager Road and Traffic Engineering Branch, who would treat this as a "Departure from Standards".

Design Speed	Based on **stopping sight distance (SSD)** for a car (1) h_1 = 1.1m h_2 = 0.2m	Based on **approach sight distance (ASD)** for a car (2) h_1 = 1.1m h_2 = 0.0m

(km/h)	Minimum values for most urban and rural road types Based on d = 0.36		Minimum values for most urban and rural road types Based on d = 0.36	
	Absolute Minimum R_T = 2.0s	Desirable Minimum R_T = 2.5s	Absolute Minimum R_T = 2.0s	Desirable Minimum R_T = 2.5s
40	3.5	4.6	7.2	9.3
50	6.8	8.6	13.8	17.5
60	11.8	14.7	24.0	29.8
70	19.1	23.3	38.9	47.5
80	29.3	35.2	59.5	71.6
90	42.9	51.0	87.3	103.8
100	60.8	71.4	123.6	145.3
110	83.6	97.3	170.0	198.0

Table 8.7: Minimum Size Crest Curve (K value) for Sealed Roads (S<L)

Notes:

1. *If the roadway is on a grade, adjust the stopping sight distance values by the values described in Note 5 of Table 5.5 to calculate the minimum size crest curve.*
2. *If the roadway is on a grade, adjust the approach sight distance values by the values described in Table 3.3 of Austroads GRD Part 4A: Unsignalised and Signalised Intersections (2023) to calculate the minimum size crest curve.*

8.6.5 Sight Distance Criteria (Sag)

High standard roads (highways and freeways) are typically designed for the "Aesthetics Govern" range of K values shown in Table 8.9.1, however if these values cannot be achieved then the desirable K values for "Urban and Rural Roads (Headlight Criteria Govern)" should be used.

K Values for Sag Curve Design

Table 8.9.1 below replaces Austroads GRD Part 3 Figure 8.9. Main Roads practice is to adopt the desirable values in the table.

Design Speed (km/h)	Low Standard Roads (Comfort Criteria Govern) (1)		Urban and Rural Roads (Headlight Criteria Govern)		Highway and Freeways (Aesthetics Govern) (3)
	(K value)		(K value)		(K value)
	Absolute. Minimum 0.1g	Desirable. Minimum 0.05g	Absolute. Minimum (2) R_T = 2.0s	Desirable. Minimum R_T = 2.5s	Desirable Minimum R_T = 2.0s
40	1.3	3	5	7	-
50	2	4	8	11	-
60	3	6	12	16	-
70	4	8	16	21	-
80	-	-	21	28	-
90	-	-	26	35	43
100	-	-	32	42	61

110	-	-	38	51	84

Table 8.9.1 K Values for Sag Curves

Notes:

1. *Only to be adopted on low standard roads and at intersections.*
2. *Based on a coefficient of deceleration of 0.46.*
3. *Values chosen to match those calculated for crest curves based on a coefficient of deceleration of 0.36. It is Main Roads preferred practice to use Aesthetic Govern for high standard roads, however if these values cannot be achieved then the desirable values for Headlights Criteria Govern should be used.*

For details of desirable sag vertical curves on the approaches to floodways refer to the MRWA Guidelines for Drainage and Waterways - Floodways.

8.6.6 Reverse/Compound/Broken Back Vertical Curves

Equation 26 is replaced with the following:

$$K\left[\frac{K_1 + K_2}{K_1 K_2}\right] \leq (1 + b)$$

Where

$K_1 + K_2$	=	K values of the two curves being tested
K	=	minimum K value from Equation 20 based on 'a' = 0.05g
b	=	the actual distance between TPs of the adopted curves divided by the desirable buffer length 0.2 V m.

8.6.9 Coordination of Vertical Curves with Superelevation Rounding Curves.

General rules for coordination of vertical curves with superelevation transition rounding curves:

1. The main profile vertical curve should not overlap the rounding vertical curve.
2. A main profile vertical curve may be compounded with a rounding vertical curve turning the same direction.
3. Compound reverse vertical curves shall not be used.
4. On a superelevation transition the whole pavement shall have a longitudinal fall in only one direction.

8.7.2 Earthworks Quantities

Project Managers in Main Roads require the computation of earthwork volumes for contract payment purposes.

Research has shown that discrepancies resulting from operator interpretation and methodology are the major cause of differences in volume calculations. Only software that

has the functionality of prismoidal methodology shall be used to undertake volume calculations for payment for Main Roads projects.

Cross section volume calculations are only to be used for verification purposes or in the case of Tender Volumes for Mass Haul Analysis.

Refer to Survey and Mapping Standard 67/08/90 Earthworks Volume Calculations for details on earthworks quantities and calculations.

9 AUXILIARY LANES

9.4.1 General

Refer to the Policy and Application Guidelines. The shoulder on the opposing carriageway to the diverge taper is not required to be widened as shown in Figure 9.4.

9.5.2 Warrants

Current year design volume (AADT) used in Table 9.4 should be based on Passenger Car Equivalents (PCE's) as defined in Table 4.5.1 of this Supplement.

9.9 GEOMETRIC REQUIREMENTS

Merge and diverge taper lengths are to be calculated in accordance with the equations in Section 9.9.2 of the Austroads guide rather than Figure 9.4.

Typical plan layouts for a variety of passing lane configurations are shown on the following Guideline Drawings:

200331-0146 Right turn pocket within passing lane
200331-0148 Right turn treatment immediately prior to start of passing lane
200331-0149 Incorporating turning pockets and auxiliary lane
201431-0038 Alternative Merge Treatments Sheet 1 of 2
201431-0039 Alternative Merge Treatments Sheet 2 of 2

9.9.2 Tapers

Diverging Taper

Where an overtaking lane is to be commenced close to an intersection, consideration may be given to commencing the lane in conjunction with the intersection treatment providing the entering vehicle can directly access the left lane as an acceleration lane as shown on the Guideline Drawing No. 200331-0149.

Merging Taper

Desirable merge sight distance requirements at the end of auxiliary lanes are shown in Tables 9.3 & 9.6. The minimum merge sight distance required is equal to car stopping sight distance, measured from an eye height of 1.1m to a zero object height, with a coefficient of deceleration (d) of 0.36 and a reaction time of 2.5 seconds, as shown in Table 5.5.

Main Roads has adopted a merge rate of 0.6 m/s at all auxiliary lane tapers.

At the end of the 2 lane section (end of lane separation line) of the overtaking, acceleration or climbing lane an absolute minimum 2 x stopping sight distance should be provided, measured from an eye height of 1.1m to an object height of 1.25m from the start of the merge to beyond the end of the merge. This is referred to as "Continuation Sight Distance". Refer to Figure 9.2.1 Merge Taper Detail.

If there is a median island adjacent to the merge, then the merge should be completed before the end of the island. This will prevent the overtaking vehicle straying onto the wrong side of the road.

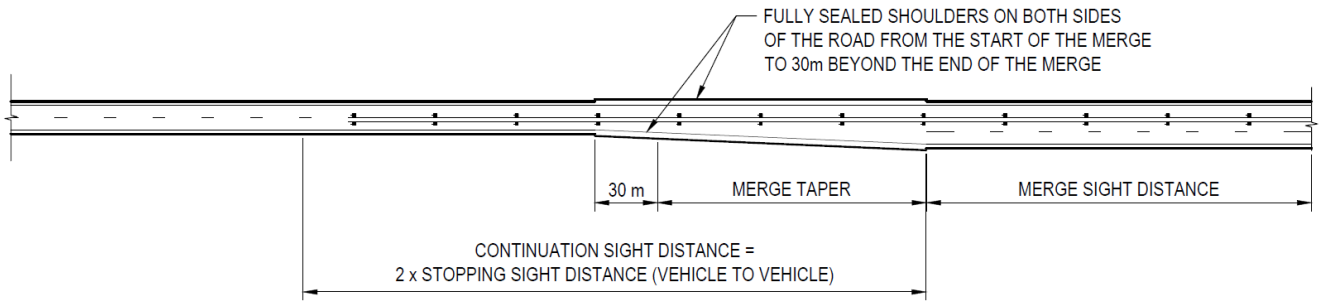

Figure 9.2.1: Merge Taper Detail

Alternative Merge Treatments

For improvements to existing merges that do not meet current guidelines refer to guideline Drawings 201431-0038 and 201431-0039 for alternative merge treatments.

These options should only be used on existing merges that do not meet current road design guidelines and should not be used for new merges. These options can only be used with the approval of the Manager Road and Traffic Engineering.

9.9.3 Cross Section

Shoulder Width

The shoulder to be provided adjacent to the auxiliary lane shall be as shown in Table 4.5. The shoulder should be fully sealed from the start of the merge to 30m beyond the end of the merge on both side of the road. Refer to Figure 9.2.1 above.

Crossfall

When widening for auxiliary lanes on horizontal curves, superelevation as determined from the Horizontal Curve Tables should be applied to the widening.

Lane Configurations

Signing and pavement marking for auxiliary lanes that meet the current guidelines shall be as per Drawing 200631-0039.

Where there are limited overtaking opportunities between closely spaced overtaking lanes, sign G9-38 should be used "C" metres (refer to table in Drawing 200631-0039) past the end of the merge taper to indicate the distance to the next overtaking lane.

10 BRIDGE CONSIDERATIONS

10.2 Cross Section

Designers should refer to Section 11 - Bridge Widths in the Bridge Branch Design Information Document No. 3912/02, for detailed information, including the process for approval of bridge widths.

APPENDIX A EXTENDED DESIGN DOMAIN (EDD) FOR GEOMETRIC ROAD DESIGN

A value outside the Normal Design Domain may only be used with the explicit approval of the Manager Road & Traffic Engineering, supported by a documented risk assessment that fully justifies the use of that value. The Main Roads Extended Design Domain and Design Exception process can be found here.

A.3.5 Longitudinal Deceleration

For a sealed road to be classified as "within a predominantly dry area", the average number of days per year with rainfall greater than 5 mm should be less than 40 with the AADT <4000 veh/d. Refer to guideline drawing No. 201831-0070 – Days of Rain.

APPENDIX B EMERGENCY AIRCRAFT RUNWAY STRIPS

Main Roads has no supplementary comments for this section.

APPENDIX C SPEED PARAMETER TERMINILOGY

Main Roads has no supplementary comments for this section.

APPENDIX D EXAMPLE CALCULATION OF THE OPERATING SPEED MODEL

Main Roads has no supplementary comments for this section.

APPENDIX E NARROW MEDIAN TREATMENTS WITH WIRE ROPE SAFETY BARRIER

Main Roads has no supplementary comments for this section.

APPENDIX F GUIDANCE FOR WIDE CENTRELINE TREATMENTS

Main Roads has no supplementary comments for this section.

APPENDIX G FLOW CHARTS AND TABLE FOR DETERMINING STOPPING SIGHT DISTANCE REQUIREMENTS FOR CURVES WITH BARRIERS

Section G.1 comprises a detailed flowchart. In the two boxes immediately above "Change geometry" there is reference to the coefficient of deceleration of d = 0.61, this value should be substituted with 0.46. Also, as per Section 5.5.2 for any horizontal curve with a side friction factor greater than the desirable maximum value, the coefficient of deceleration should be reduced by 0.05.

APPENDIX H THEORY OF MOVEMENT IN A CIRCULAR PATH

Main Roads has no supplementary comments for this section.

APPENDIX I REVERSE CURVES

Main Roads has no supplementary comments for this section.

APPENDIX J TRANSITION CURVES (SPIRALS)

Main Roads has no supplementary comments for this section.

APPENDIX K VERTICAL CURVE CURVATURE FORMULAE

Main Roads has no supplementary comments for this section.

APPENDIX L POLICY AND GUIDELINES FOR OVERTAKING LANES

Refer to the Policy and Application Guidelines.